MICRO SWITCH
a Honeywell Division
FED.MFG.CODE 91929

SWITCH-BASIC

CATALOG LISTING
BZ-2RW84467-A2

APY0293

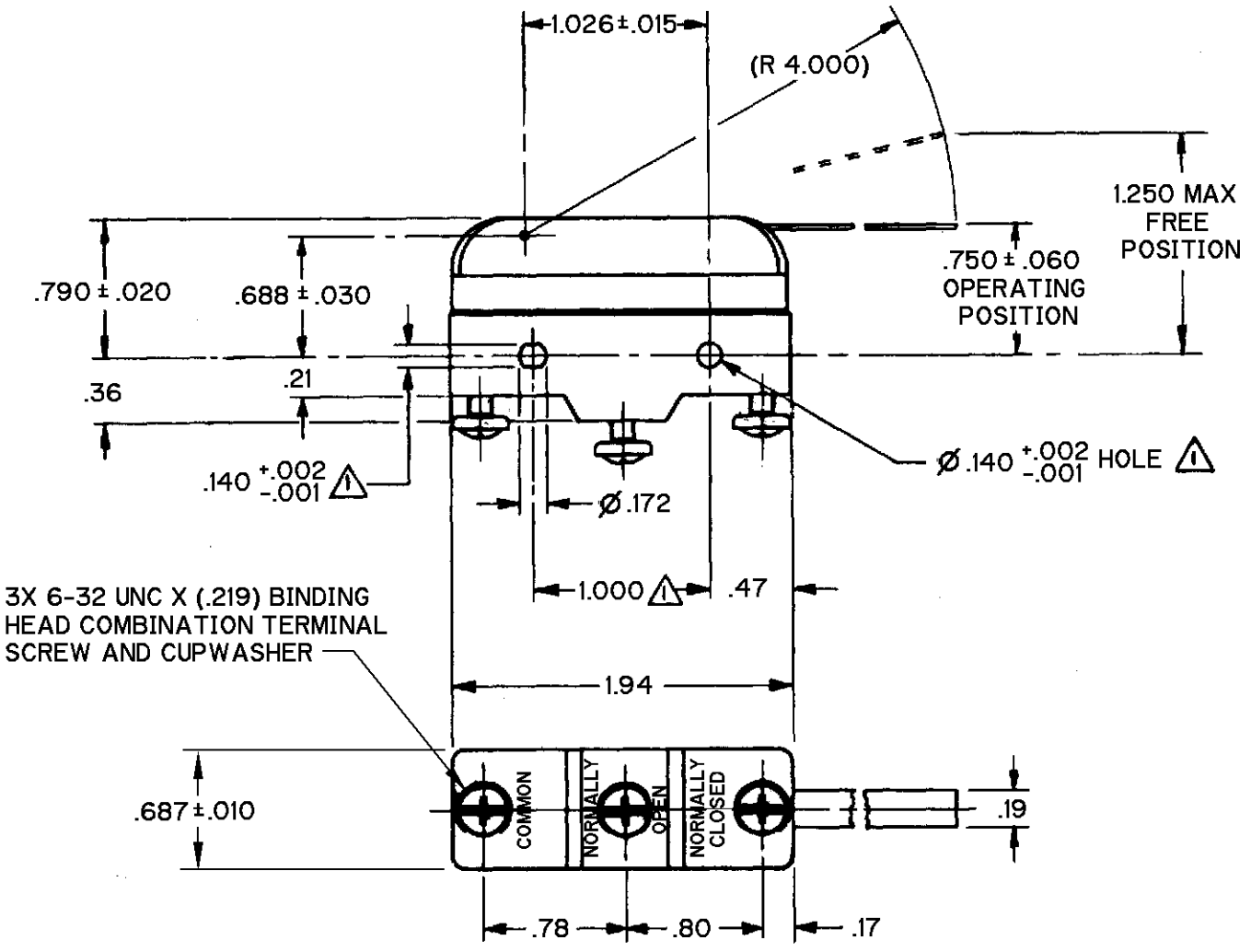

NOTE
1 - MOUNTING HOLES WILL ACCEPT PINS OR SCREWS OF Ø.139 MAX ON 1.000±.002 CENTERS

ANSI Y14.5M-1982 APPLIES

THIS DRAWING COVERS A PROPRIETARY ITEM AND IS THE PROPERTY OF MICRO SWITCH, A DIVISION OF HONEYWELL. THIS DRAWING IS NOT TO BE COPIED OR USED WITHOUT THE APPROVAL OF MICRO SWITCH.

THIRD ANGLE PROJECTION

CHARACTERISTICS	ELECTRICAL DATA	SCALE FULL / DO NOT SCALE PRINT
OPERATING FORCE - - - - 3/4 OZ MAX	CONTACT ARRANGEMENT SPDT	UNLESS OTHERWISE SPECIFIED TOLERANCES ARE
DIFFERENTIAL FORCE- - -1/2 OZ MAX	L96 15A 125, 250 OR 480 VAC 1/8HP 125 VAC, 1/4HP 250 VAC 1/2A 125 VDC, 1/4A 250 VDC	ONE PLACE (.0) ±.030
PRETRAVEL - - - - - - - .562 MAX		TWO PLACE (.00) ±.015
DIFFERENTIAL TRAVEL- - .023-.080		THREE PLACE (.000) ±.005
OVERTRAVEL - - - - - - -.266 MIN	-L288- -L306- -L315- 16A 250V ∼ T85 5E4	ANGLES ±
		WEIGHT

X101334-BZ REPLACES
PR-22777 RELEASE NO.
CATALOG LISTING BZ-2RW84467-A2
PAGE 1 OF 1
ISSUE 3
CHECK
REVISIONS
A C093346 DLT 17 SEP 98
B 0015138 SPK 29 AUG 05
CHECK
29 AUG 05 RJ
CHECK
4 JUNE 97 TSM
DRAWN
FORMTEK